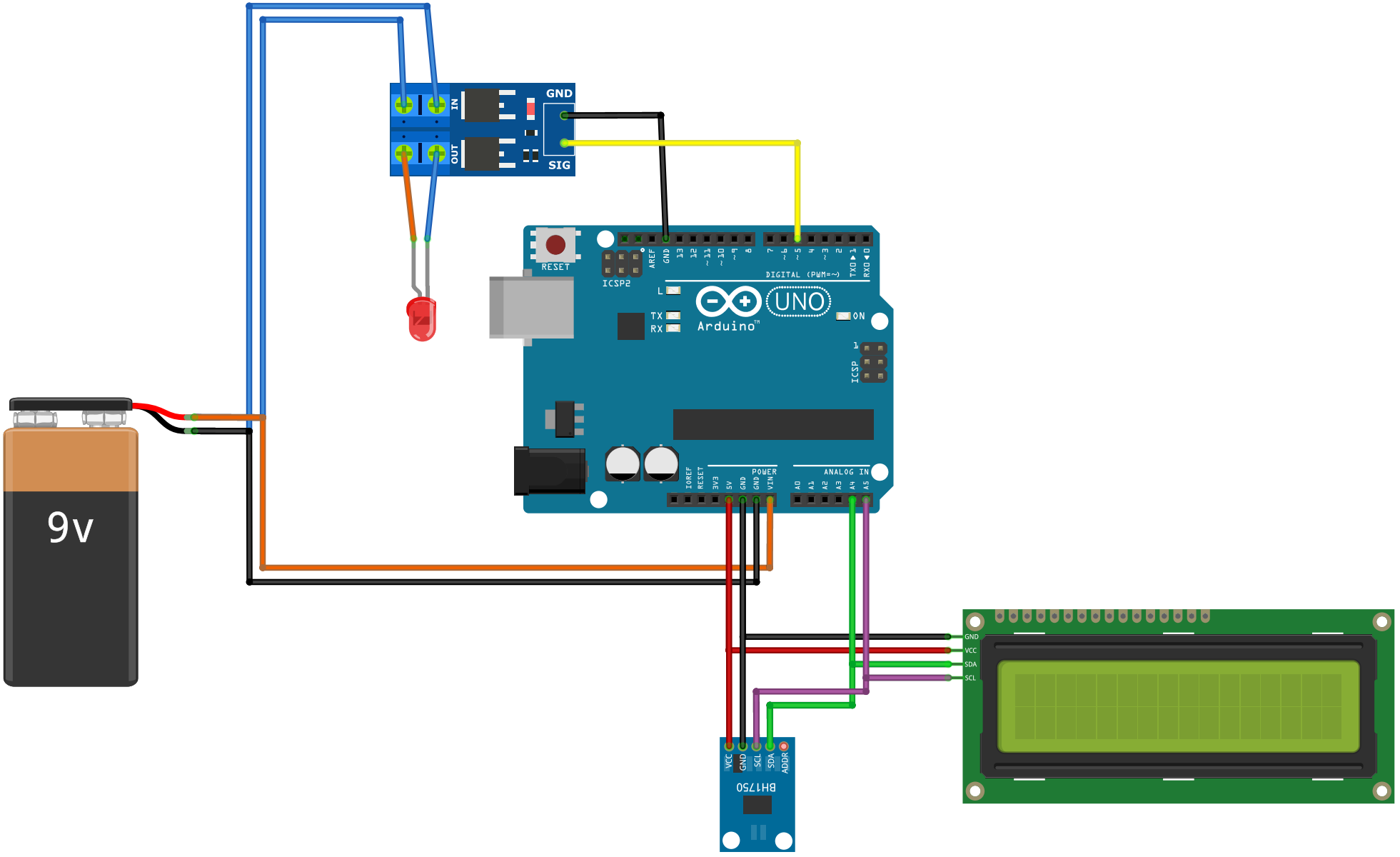
GND
IN
OUT
SIG
RESET
ICSP2
AREF
GND
13
12
~11
~10
~9
8
7
~6
~5
4
~3
2
TX→1
RX←0
DIGITAL (PWM=~)
L
TX
RX
UNO
Arduino
ON
ICSP
IOREF
RESET
3V3
5V
GND
GND
VIN
POWER
ANALOG IN
A0
A1
A2
A3
A4
A5
9v
VCC
GND
SCL
SDA
ADDR
BH1750
GND
VCC
SDA
SCL
fritzing